P55 Series PANEL TRACKERBALL

Technical Drawings

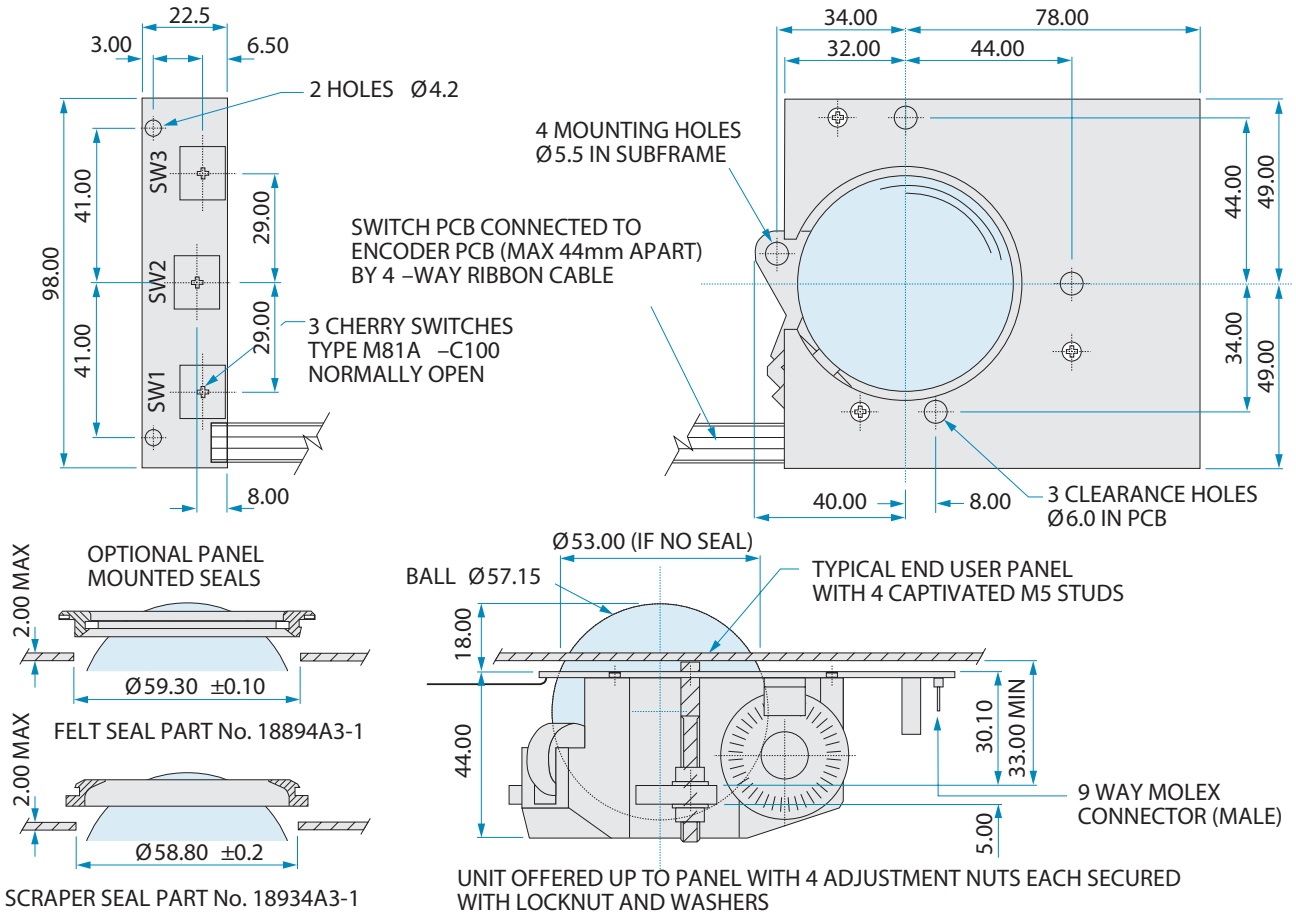

Cursor Controls Ltd, Conroi House, Brunel Drive, Newark, Nottinghamshire, U.K.
Tel: +44 (0) 1636 615600 Fax: +44 (0) 1636 615601 Website: www.cursorcontrols.com E-mail: sales@cursorcontrols.com